FIPSHIELD®

FRÄNKISCHE
INDUSTRIAL PIPES

EZPA-D-PGM (Spring)

金属*PG*制螺纹带*EMC*弹片应力消除直接头

Fitting strain relief, straight, PG, metal thread, EMC-Spring

CE · EN 45545-2 · ASTM INTERNATIONAL · NFPA 130 · RoHS · REACH · IP · HALOGEN FREE

+120°C / +248°F

–50°C / –58°F

	min.				max.
温度范围 *Temperature range*					
UV保护性能 *UV protection*					
低温性能 *Cold environment performance*					
防尘性能 *Dust ingress protection*					
防水性能 *Water ingress protection*					
机械强度 *Mechanical strength*					

材料: **PA6 MOD V0 SGA**

金属*PG*制螺纹带EMC弹片应力消除直接头 EZPA-*D-PGM*由特殊改性, 无卤的尼龙6材料制成。材料自熄且耐绝大多数化学品。接头内部的弹片确保了与电缆外皮的屏蔽编织层的有效电接触。材料耐*UV*性能优异, 所以 *EZPA-D-PGM* 非常适合户外安装应用。产品锁定系统为新的*360°*内部倒齿锁定, 内部带密封圈, *EZPA-D-PGM* 与我们的*FIPLOCK*波纹管连接后可以达到*IP69*的防尘防水等级。发货状态为预装配状态, 拆卸时只需要一个简单的螺丝起子就可以打开。*EZPA-D-PGM* 优异的设计显著提升了使用效率, 节省了安装及拆卸的时间。

Material: PA6 MOD V0 SGA

The one-piece protection conduit fitting EZPA-D-PGM with integrated cable gland for additional strain relief of wires and conductors, with a PG metal thread, is made of specially modified, halogen-free polyamide 6. The Material compound is self-extinguishing and resistant against most chemical media commonly used. The containing spring contacts at the cable passage enables a proper electrical contact with screening braids above the cables. Due to its excellent UV-resistance, EZPA-D-PGM is also perfectly suited for outdoor installations. With the brand new 360° interlocking system and an inside conduit seal, EZPA-D-PGM complies with the highest possible protection class IP69 in combination with our FIPLOCK corrugated conduits. Being delivered pre-assembled and easy to re-open by using a commercially available slotted screwdriver, EZPA-D-PGM ensures significant time saving during installation and disassembly.

FIP SHIELD®

FRÄNKISCHE
INDUSTRIAL PIPES

EZPA-D-PGM (Spring)

产品性能 / *Product performances*

应用性能 / ***Application performances***	特性 ***Characteristics***	单位 ***Unit***	规范标准 ***Standards, specifications***	备注 ***Remark***
温度范围 *Temperature range*	–50 到 / *to* +120 –58 到 / *to* +248	°C °F	IS FIP	
温度 (短周期) *Temperatur (short-term)*	150 (500 h); 160 (100 h) 302 (500 h); 320 (100 h)	°C °F	IS FIP	
材料性能 / *Material performances*				
缺口冲击测试 *Notched bar impact test*	7 – 25	kJ/m²	ISO 180	
系统密封性能 / *System tightness*				
IP 等级 *IP rating*	IP66/IP67/IP68/IP69		IEC EN 60529	
防火性能 / *Fire safety performances*				
不含卤素和镉 *Free from halogens and cadmium*	是 / *yes*			
阻燃等级 *Fire classification*	V0		UL 94	
产品防火特性 *Fire characteristic of the product*	自熄 *self-extinguishing*		UL 1696	
氧指数 *Oxygen index*	>32	%	EN ISO 4589-2	
灼热丝测试 *Glow wire test*	960 1760	°C °F	IEC 60695	
火灾危害等级 *Fire hazardous level*	HL3		EN45545-2	
火焰蔓延 *Spread of fire*	非火焰蔓延 *non flame propagating*		IEC EN 61386	
屏蔽性能 / *Screen characteristics*				
转移阻抗 *Transfer impedance*	≤10	mOhm		
屏蔽性能 *Screen effectiveness*	可达 98 *up to 98*	dB		
耐候性 / *Weathering performances*				
UV及耐候性 *UV and weathering performance*	优异 *excellent*		IS FIP	可达 40 年 *up to 40 years*

测试条件参照EN ISO 139温度23°C, 湿度 50% (如未注明测试条件) 。IS FIP = FIP内部测试规范。
Tests carried out acc. EN ISO 139 at 23°C / 50% r. h. (if not indicated different). IS FIP = Internal Specification FIP

FIP SHIELD®

FRÄNKISCHE
INDUSTRIAL PIPES

产品号 **Part No.**	名义尺寸 ***Nominal width***	螺纹尺寸 **G** ***Thread G***	尺寸 **(nom.)** ***Dimensions in mm (nom.)***								重量 ***Weight per piece***	包装单元 ***PU***
黑色 / ***black***	**NW**		**LG**	夹紧范围 **F** / ***Clamping range F***	最小屏蔽套管尺寸 **Ø** / ***Minimum Ø above braiding***	**H**	**Ø D**	**Ø E**	**SW1**	**SW2**	**g**	个 / ***Pcs***
EZPA-10P09MB-DL1	NW10	PG9	6,0	3,0-8,0	4,0	54,9	24,7	22,9	17	20	27,2	10
EZPA-10P11MB-DL1	NW10	PG11	6,0	4,0-8,0	4,0	57,9	24,7	26,2	20	20	35,7	10
EZPA-12P11MB-DL1	NW12	PG11	6,0	4,0-9,5	4,0	59,9	28,5	26,6	20	22	37,9	10
EZPA-12P13MB-DL1	NW12	PG13,5	6,5	5,0-9,5	4,0	60,4	28,5	28,6	22	22	41,2	10
EZPA-17P16MB-DL1	NW17	PG16	6,5	8,0-13,0	6,0	71,8	34,0	31,5	24	27	53,5	10
EZPA-23P21MB-DL1	NW23	PG21	7,0	11,0-18,0	8,0	77,3	41,7	38,3	30	36	87,5	6
EZPA-29P29MB-DL1	NW29	PG29	8,0	16,0-23,0	13,0	85,4	48,4	48,7	40	41	159,7	6
EZPA-36P36MB-DL1	NW36	PG36	15,0	19,0-29,0	16,0	112,4	59,7	59,4	50	52	281,6	4

关于产品库存, 交期, 尺寸及颜色等问题请联系我们本地的经销商或客服。
Please contact our local distribution partner or our customer service regarding product availability, lead time, other sizes and colours.

产品代码 / ***Number code:***

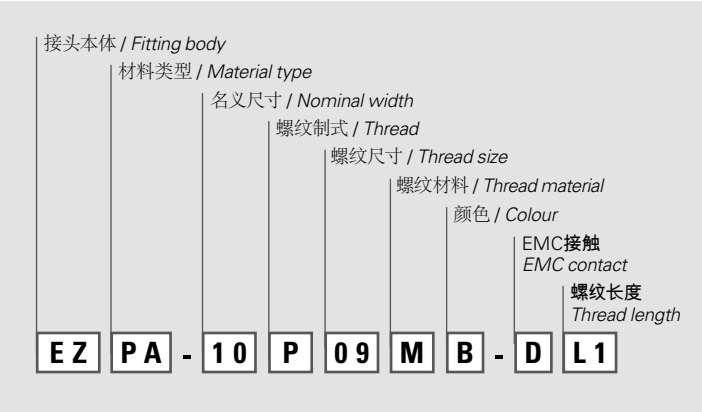

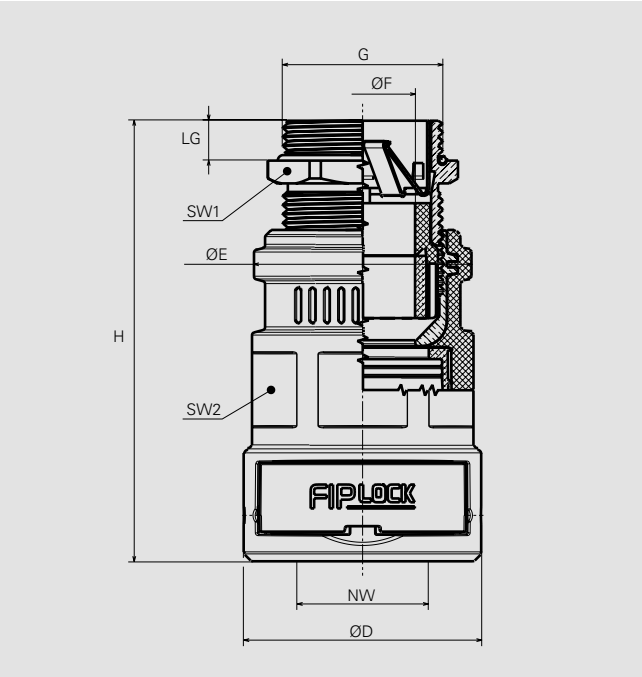

完整的安装说明可从下列网址找出
www.fraenkische.com/assembly_instruction_fiplock_one_cn
*The entire **assembly instructions** may be found on www.fraenkische.com/assembly_instruction_fiplock_one_cn*

我们尽我们的知识水平所提供的数据, 图像和技术规格图反映了当前的工程技术水平。这不包含对最后应用有关的任何责任。产品用户需根据应用进行自己的评估, 以确定产品是否符合特殊的应用条件。我们对产品的责任只考虑一般规定条件下的水平。FIP保留对产品数据和数值进行技术调整的权力。例如更改材料和加工工艺, 在保证产品性能数值不下降的情况下不会另行通知。

The provided data, images and technical specification drawings reflect the current engineering level and are to the best of our knowledge. This does not include any liability regarding the final application. Users of the products have to make their own evaluation to determine the suitability for a specific application. Our liability for these products considers the stated level within our General Conditions only. FRAENKISCHE Industrial Pipes (FIP) reserves the right to adjust specified data and values as well as implementing technical adjustments of the products e. g. change of materials and processing technologies without prior notice as long as the specified values are not reduced.

FRÄNKISCHE Industrial Pipes GmbH & Co. KG | Hellinger Str. 1 | 97486 Königsberg/Germany
Phone +49 9525 88-0 | Fax +49 9525 88-155 | info@fraenkische-ip.com | www.fipsystems.com

D/E.3447/5.07.20 FIP | 如有更改, 恕不另行通知 / *Subject to change without notice*

FIPSHIELD®

FRÄNKISCHE
INDUSTRIAL PIPES

安装说明FIPSHIELD® 带弹片的EMC接头
Assembly instruction FIPSHIELD® with EMC Spring

安装 / *Assembly*

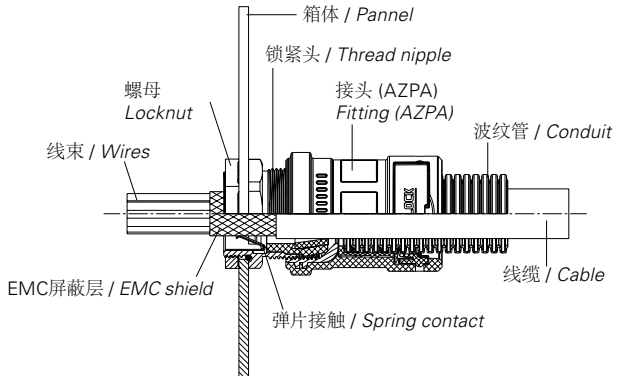

线缆准备 / *Preparing of the cable*

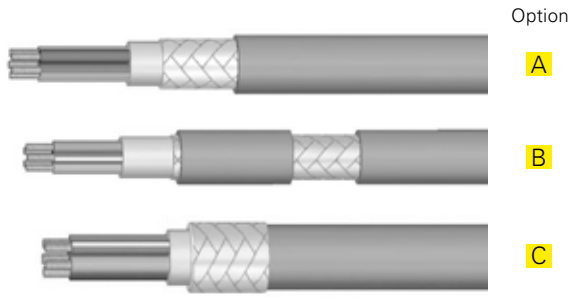

1. 將FIPSHIELD® 锁紧头拧入箱体，或使用EMI锁紧螺母 (NTBN-EMV)锁紧。

   Screw FIPSHIELD® thread nipple into the housing/panel or fasten it with EMI Locknut (NTBN-EMI).

2. 安装线缆 (线缆屏蔽段安装在接触点位置)。

   Apply cable (dismantled in the contact area).

3. 接头本体安装到锁紧头处并锁紧。

   Fittingbody to be applied to the thread nipple and tighten for strain relief.

A 从线缆端部剥离外皮露出屏蔽层。

Remove the cable sheath from the end section of screen braiding.

B 从线缆中部剥离一段外皮露出屏蔽层。

Remove a segment of cable sheath at the contact area.

C 将屏蔽层翻起拉到线缆外皮上。

Pull the fringe section of screen braiding over the cable sheath.

PG 制铜镀镍接头 / ***PG nickel plated brass***	
螺纹尺寸 / *Thread*	最大锁紧扭矩 *max. tightening torque*
PG07	6,25 Nm
PG09	6,25 Nm
PG11	6,25 Nm
PG13,5	6,25 Nm
PG16	7,5 Nm
PG21	10,0 Nm
PG29	10,0 Nm
PG36	10,0 Nm
PG48	10,0 Nm

公制铜镀镍接头 / ***metric nickel plated brass***	
螺纹尺寸 / *Thread*	最大锁紧扭矩 *max. tightening torque*
M12x1,5mm	8,0 Nm
M16x1,5mm	10,0 Nm
M20x1,5mm	12,0 Nm
M25x1,5mm	12,0 Nm
M32x1,5mm	18,0 Nm
M40x1,5mm	18,0 Nm
M50x1,5mm	20,0 Nm
M63x1,5mm	20,0 Nm

NPT 制铜镀镍接头 / ***NPT nickel plated brass***	
螺纹尺寸 / *Thread*	最大锁紧扭矩 *max. tightening torque*
NPT 3/8	6,0 Nm
NPT 1/2	8,0 Nm
NPT3/4	12,0 Nm
NPT 1"	12,0 Nm

注意 / *Note*:

弹片仅用于EMC电磁屏蔽的目的。它不能用于电位平衡。

The spring is to be used only for EMC purposes. It is strictly forbidden to use the spring as a potential equalisation.